STERLCO®

STEAM CONTROL PRODUCTS
STEAM TRAPS

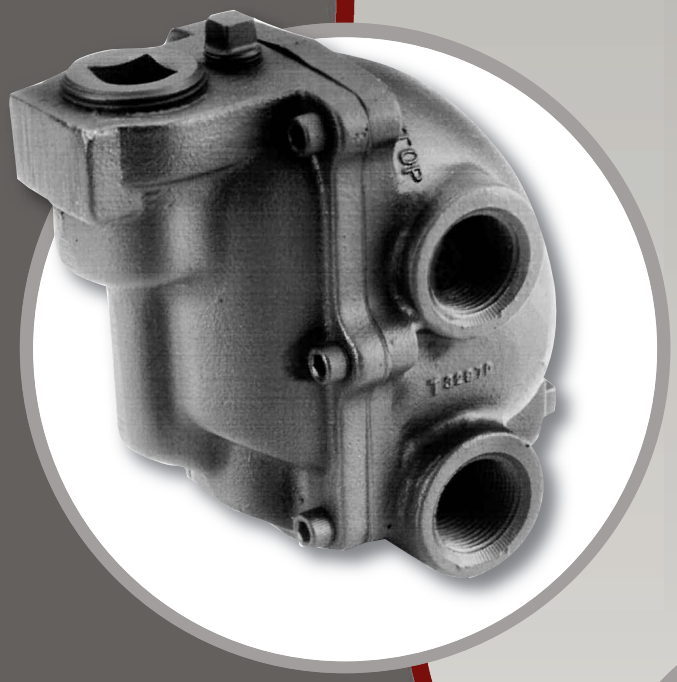

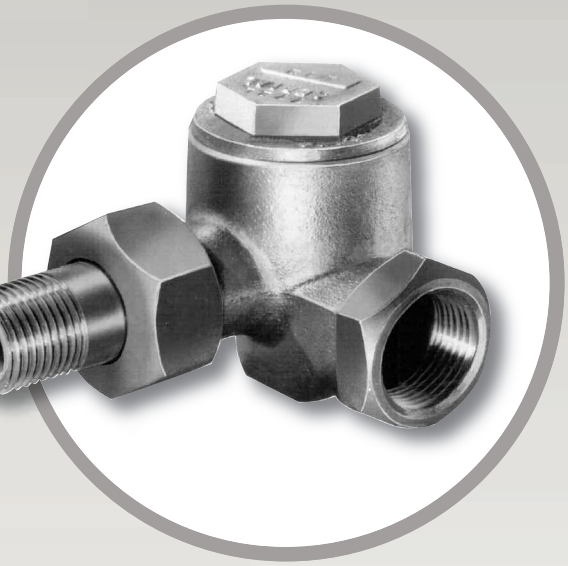

Inverted Bucket
Float & Thermostatic
Radiator Traps

Sterling
STEAM CONTROL PRODUCTS

ABOUT US

In 1916, the company, then known as the Sterling Engineering Company, began designing and manufacturing valves, traps, strainers and condensate pumps for steam and hot water systems.

Today, with more than 90 years of application experience, a diverse engineering staff, state-of-the art CAD design and thousands of custom applications, we are uniquely suited to meet your individual requirements and specifications.

OPERATING FUNDAMENTALS

STERLCO THERMOSTATIC RADIATOR TRAPS (THE SMART TRAP) HOW THE STERLCO THERMOSTAT OPERATES

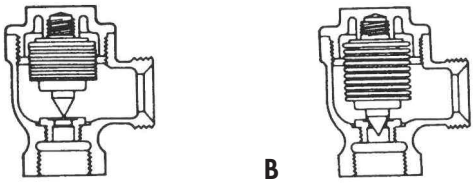

A. In a trap which is cold, or which is full of condensate below the boiling point, the Sterlco® thermostat remains compressed because of its internal vacuum. The trap is open and condensate flows out.

B. Whenever live steam strikes the bellows, the water inside the thermostat starts to vaporize or boil. As soon as the steam pressure inside the thermostat becomes almost equal to the steam pressure surrounding the thermostat, the spring action of the bellows causes it to extend itself and close the trap. Because the thermostat is filled with pure water, the relationship of inside and outside pressures is always the same. This trap will always pass condensate and hold back steam in spite of any variations in steam pressure.

If the thermostat is damaged, the vacuum inside will be lost and the trap will remain closed whether it is hot or cold. The location of the trouble will be easy to find because the radiator will be cold. Meanwhile, no steam is wasted.

STERLCO INVERTED BUCKET

On start up, the bucket, by its own weight, rests on the trap bottom. The main valve is open, allowing the discharge of air and non-condensables. As condensate fills the body, it creates a seal on the open end of the bucket, which then becomes buoyant and rises, closing the main valve. Condensate, however, continues to enter the trap and force the air within the bucket out through the vent hole, causing it to lose its buoyancy and sink, opening the main valve to discharge. Condensate is discharged until steam reaches the trap and fills the bucket, which regains buoyancy and the operating cycle is repeated.

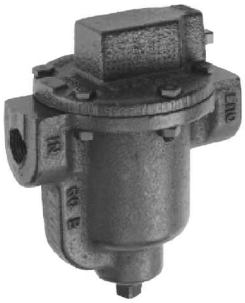

STERLCO FLOAT AND THERMOSTATIC

The Sterlco® F&T Trap contains a balanced pressure thermostatic air vent and main float operated valve for condensate removal. Air initially has free access to discharge until surrounded by high temperature which closes the vent. As condensate fills the trap body, the float rises, opening the main valve and discharging the condensate as it is received. The F&T is a fully modulating type trap that responds immediately or continuously to condensate discharge. The liquid level within the body is preset above the main valve, assuring that, when discharging, the orifice sees only liquid, thereby preventing the loss of live steam.

THERMOSTATIC RADIATOR TRAPS (THE STERLCO SMART TRAP)

CONSTRUCTION

Trap bodies, covers, union nuts and nipples are close grained red brass castings. Accurate machining assures steam-tight fit and complete interchangeability of parts. Sterlco® low pressure traps, except 715-A, have valve cones of long-wearing tobin bronze and seats of brass. All others have stainless steel cones and seats for maximum resistance to high temperatures and abrasion. Stainless steel cones and seats are available for 1/2" and 3/4" LP traps.

STERLCO VACUUM THERMOSTAT FEATURES

- Bellows convolutions are formed under extremely high hydraulic pressure
- Smooth bellows surfaces means no tool marks where wear or corrosion can start.
- Multiple convolutions provide free travel of the valve cone. There is no danger of failures due to excessive bellows flexing.
- Vacuum charged...not charged at atmospheric pressure. The trap will close immediately if damaged.

THE STERLCO SMART TRAP

Will operate efficiently regardless of steam pressure variation. All thermostats and seats are replaceable without shimming or adjustment. Every trap is thoroughly tested. Components are inspected and tested during manufacture; completed traps undergo complete operating tests before shipment.

Angle Pattern
750 Series for low pressure; M-7 Series for medium pressure; 8 Series for high pressure

Straightway Pattern
Provides minimum loss of height on horizontal piping

Vertical Pattern
780 Series for vertical piping and convectors

Corner Pattern
770 Series for low pressure heating. In right hand and left hand styles for convenient installation

THERMOSTATIC RADIATOR TRAPS DIMENSIONS AND CAPACITIES

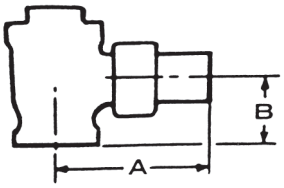

Angle

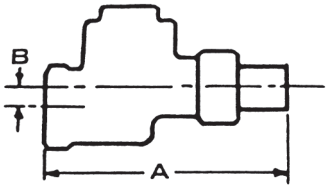

Straightway

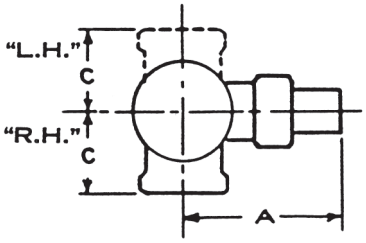

Corner (top view)

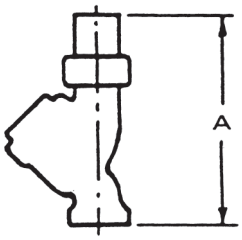

Vertical

DIMENSIONS AND CAPACITIES

Pressure Rating Lbs./Sq. In.	Inlet and Outlet Size (Am. Std. Pipe Thd.)	Model	Body Style	Dimensions			Capacity in lbs./hr at Pressure Differentials Indicated						
				A	B	C	1/4 lb.	1/2 lb.	1 lb.	2 lb.	5 lb.	10 lb.	15 lb.
0-25 Low Pressure	1/2"	750-A	Angle	3 1/4*	1 1/4		85	120	165	235	370	530	640
		770-R	R.H.Corner	3 1/4*	3/8	1 5/8							
		770-L	L.H. Corner	3 1/4*	3/8	1 5/8							
		770-S	Straightway	4 7/8*	3/8								
		780-V	Vertical	5*									
	3/4"	753-A	Angle	3 1/8*	1 1/4		165	230	330	465	730	1050	1300
		773-S	Straightway	5 1/4*	3/8								
	1"	715-A	Angle	3 1/4*	1 5/8		290	410	580	810	1280	1840	2300

Note: Above ratings are in accordance with the standards of the Steam Heating Equipment Manufacturers Association. Since actual test capacities are from two to four times these ratings, traps may be selected directly from the table for the lowest pressure differential expected.

Pressure Rating, Lbs./Sq. In.	Inlet and Outlet Size (Am. Std. Pipe Thd.)	Model	Body Style	Dimensions		Capacity in lbs./hr at Pressure Differentials Indicated								
				A	B	5 lb.	10 lb.	15 lb.	25 lb.	50 lb.	65 lb.	75 lb.	100 lb.	125 lb.
0-75 Med. Pressure	1/2" 3/4" 1"	M-750-A	Angle	3 1/4*	1 1/4	525	780	985	1340	2020	2175	-	-	-
		M-753-A		3 1/8*	1 1/4	585	1040	1405	1670	2390	2490	-	-	-
		M-715-A		3 1/4	1 5/8	710	1300	1900	2715	4130	4690	-	-	-
0-125 High Pressure	1/2" 3/4" 1"	850-A	Angle	3 1/4*	1 1/4	400	640	935	1240	1750	1965	2080	2280	2400
		853-A		2 3/4	1 1/4	510	900	1400	1900	2500	2720	2850	3100	3340
		812-A		3 1/4	1 5/8	710	1300	1900	2715	4130	4690	4940	5385	5720

* Available with tail pieces to reduce or increase "A" dimension by 3/8 inch.

Sterlco® thermostatic radiator traps accurately and efficiently free radiators of air and condensate... without allowing steam to be wasted into returns. They are especially effective on vacuum heating systems. Their simple design and rugged construction assure long, dependable service.

FLOAT AND THERMOSTATIC OPERATING FUNDAMENTALS

FOR EFFICIENT HANDLING OF LARGE AIR QUANTITIES AND WIDELY VARYING CONDENSING RATES

Sterlco® Float and Thermostatic (F&T) steam traps are preferred for efficient, economical vacuum and pressure service. F&T traps are highly recommended for applications where large volumes of air are present on start-up and where condensing rates can vary widely. F&T traps are ideal for service in health care institutions, apartments, educational facilities, offices and other public areas as well as in business and industry.

Choose from 21 standard capacity models, available in five connection sizes from 3/4" to 2". Float and Thermostatic steam traps are designed for ease of installation and simplified, minimal maintenance.

FT-69-15

FT-4-15

FT-75-15

FT-80-15

DEPENDABLE, TROUBLE-FREE FLOAT ACTUATION

F&T traps operate in response to rising and falling condensate levels and rising and falling temperatures near the thermostatic vent, as follows:

- Condensate initially fills the trap body to a predetermined level, which is sufficient to seal the valve seat opening.
- As the condensate level continues to rise, the float will rise causing the valve to pull away from the seat.
- Condensate will then be discharged into the return line through the trap outlet. The rise and fall of condensate level causes a continuous discharge which is typical of F&T traps.
- Air entering the trap is discharged through the thermostatic vent. The opening and closing of the vent is dependent upon the temperature surrounding the thermostatic element.
- As the element cools with more air accumulating, it opens to allow the air to vent to the atmosphere.

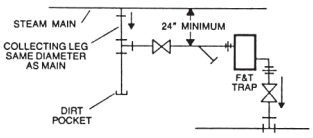

Draining Main

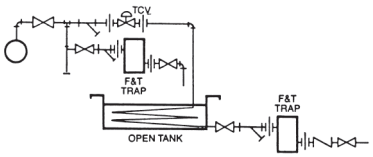

Draining Open Tank

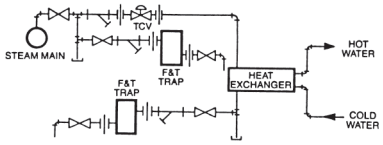

Draining Heat Exchanger

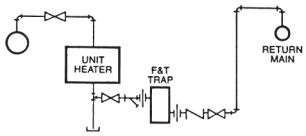

Draining Unit Heater

TYPICAL INSTALLATIONS

Install F&T traps in steam applications such as Instantaneous Heaters, Steam Humidifiers, Steam-Jacketed Vessels, Unit Heaters, Sterilizers and other similar equipment. Pictured at right are diagrams of typical installations.

FLOAT AND THERMOSTATIC RECOMMENDATIONS

STERLCO F&T TRAPS ARE DESIGNED SPECIFICALLY FOR MAXIMUM CONDENSATE REMOVAL AT SIX DIFFERENT PRESSURE RATINGS

Heating Service
3/4" through 2" NPT - Vacuum to 15 psi

3/4" FT-69-15
3/4" FT-3-15
1" FT-4-15
1" FT-74-15
1 1/4" FT-75-15
1 1/2" FT-78-15
2" FT-80-15

Industrial Service
3/4", 1" NPT - to 30 psi

3/4" FT-3-30
1" FT-4-30

Industrial Service
3/4", 1", 1 1/4" NPT - to 75 psi

3/4" FT-56-75
3/4" FT-3-75
1" FT-4-75
1" FT-57-75
1 1/4" FT-58-75

Industrial Service
3/4", 1", 1 1/4" NPT - to 125 psi

3/4" FT-86-125
1" FT-87-125
1 1/4" FT-88-125

Industrial Service
3/4", 1" NPT - to 150 psi

3/4" FT-3-150
1" FT-4-150

Industrial Service
3/4", 1" NPT - to 175 psi

3/4" FT-3-175
1" FT-4-175

FT-57-75

FT-88-15

FT-78-15

FT-4-175

FLOAT AND THERMOSTATIC CAPACITIES

DISCHARGE CAPACITIES - SHEMA RATINGS TO 15 PSI

		Pressure Differential, PSI						
		1/4 lb.	1/2 lb.	1 lb.	2 lb.	5 lb.	10 lb.	15 lb.
Model Number	**Size**	**Capacities in lbs. of Condensate per hour**						
FT-69-15	3/4	70	100	140	200	210	220	230
FT-3-15	3/4	70	100	140	200	210	220	230
FT-74-15	1	175	250	350	500	525	550	575
FT-4-15	1	175	250	350	500	525	550	575
FT-75-15	1 1/4	425	600	850	1200	1260	1320	1380
FT-78-15	1 1/2	850	1200	1700	2400	2520	2640	2760
FT-80-15	2	1775	2500	3550	5000	5250	5500	5750

Note: Capacity ratings shown here are based on the code established by the Steam Heating Equipment Manufacturers Association (SHEMA).

DISCHARGE CAPACITIES - ACTUAL RATINGS TO 175 PSI

		Pressure Differential, PSI														
		1/2	1	2	5	10	15	20	30	50	60	75	100	125	150	175
Model Number	**Size**	**Capacities in lbs. of Condensate per hour**														
FT-69-15	3/4	400	560	800	840	880	920									
FT-3-15	3/4	525	700	975	1370	1870	2225									
FT-4-15	1	525	700	975	1370	1870	2225									
FT-74-15	1	750	1050	1500	1575	1650	1725									
FT-75-15	1 1/4	1800	2550	3600	3780	3960	4140									
FT-78-15	1 1/2	3600	5100	7200	7560	7920	8280									
FT-80-15	2	7500	9180	15000	15750	16500	17250									
FT-3-30	3/4	300	410	580	1050	1410	1620	1830	2130							
FT-4-30	1	300	410	580	1050	1410	1620	1830	2130							
FT-3-75	3/4	155	215	300	515	680	840	960	1140	1410	1540	1676				
FT-4-75	1	155	215	300	515	680	840	960	1140	1410	1540	1676				
FT-56-75	3/4	175	240	340	440	770	825	1085	1290	2005	2235	2350				
FT-57-75	1	175	240	340	440	770	825	1085	1290	2005	2235	2350				
FT-58-75	1 1/4	185	255	375	730	880	1280	1520	1880	2980	2700	2980				
FT-86-125	3/4	110	150	200	255	375	450	480	565	690	760	1265	1445	1600		
FT-87-125	1	110	150	200	255	375	450	480	565	690	760	1265	1445	1600		
FT-88-125	1 1/4	180	250	320	430	680	725	950	1250	1590	1760	1935	2205	2445		
FT-3-150	3/4	80	115	150	230	310	390	450	540	640	740	820	930	1050	1130	
FT-4-150	1	80	115	150	230	310	390	450	540	640	740	820	930	1050	1130	
FT-3-175	3/4	60	80	110	175	250	300	340	410	520	560	610	695	765	820	870
FT-4-175	1	60	80	110	175	250	300	340	410	520	560	610	695	765	820	870

Note: Capacities listed are actual ratings. To provide for peak loads such as warming up periods, a frequently used safety factor is twice the hourly condensing rate.

FLOAT AND THERMOSTATIC DIMENSIONS AND FEATURES

DIMENSIONS - INCHES

Model Number	Approx. Wt. Lbs.	Inlet	Outlet	A	B	C	D	E	F	G	H	J
FT-69-15	6	3/4	3/4	4 3/4	5 3/8	3 3/8		1 3/4	1 5/8	1 1/8	1 1/8	
FT-74-15	14.5	1	1	8 1/4	6 3/4	5	5	3 3/8	1 1/4	1 1/4	2 1/4	3/8
FT-75-15	17.5	1 1/4	1 1/4	9 5/8	6 3/4	6	5	3 3/8	1 1/4	1 1/4	2 1/4	3/8
FT-78-15	27	1 1/2	1 1/2	11 1/2	6 3/4	6 1/2	5	3 3/8	1 1/4	1 1/4	2 1/4	3/8
FT-80-15	41	2	2	15 1/2	9 3/4	8 1/2	7 1/4	4 1/8	1 5/8	3 1/4	3 5/8	
FT-56-75	13.5	3/4	3/4	8 1/4	6 3/4	5	5	3 3/8	1 1/4	1 1/4	2 1/4	3/8
FT-57-75	14.5	1	1	8 1/4	6 3/4	5	5	3 3/8	1 1/4	1 1/4	2 1/4	3/8
FT-58-75	15.5	1 1/4	1 1/4	8 1/4	6 3/4	5	5	3 3/8	1 1/4	1 1/4	2 1/4	3/8
FT-86-125	13.5	3/4	3/4	8 1/4	6 3/4	5	5	3 3/8	1 1/4	1 1/4	2 1/4	3/8
FT-87-125	14.5	1	1	8 1/4	6 3/4	5	5	3 3/8	1 1/4	1 1/4	2 1/4	3/8
FT-88-125	15.5	1 1/4	1 1/4	8 1/4	6 3/4	5	5	3 3/8	1 1/4	1 1/4	2 1/4	3/8
FT-3-	9	3/4	3/4	6	6 5/8	4 1/8		3 1/8	2 5/8	3 7/8	2 1/4	
FT-4-	9	1	1	6	6 5/8	4 1/8		3 1/8	2 5/8	3 7/8	2 1/4	

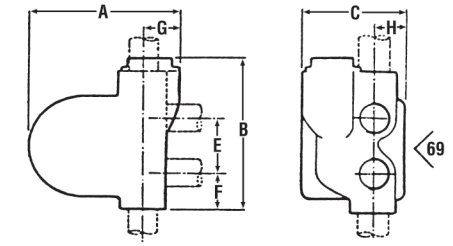

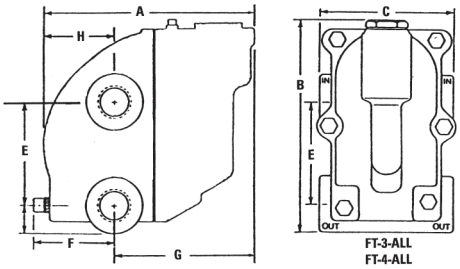

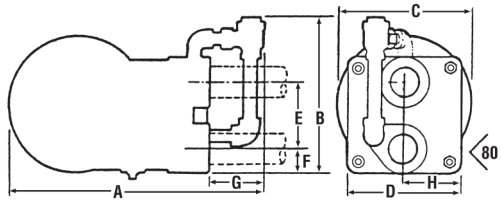

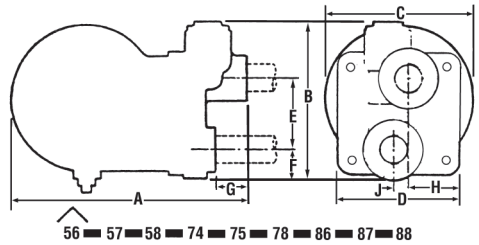

TIME-TESTED DESIGN AND QUALITY MATERIALS FOR LONGER SERVICE LIFE

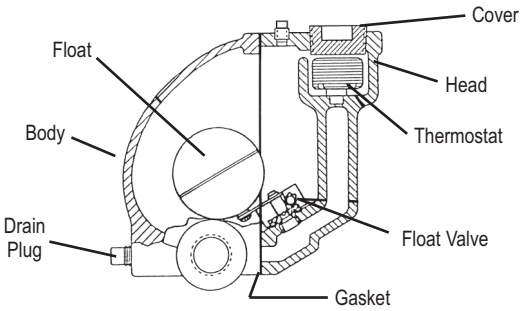

Model FT-3, FT-4

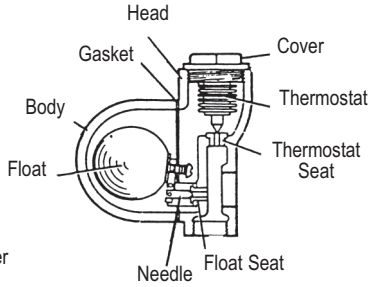

Model FT-69

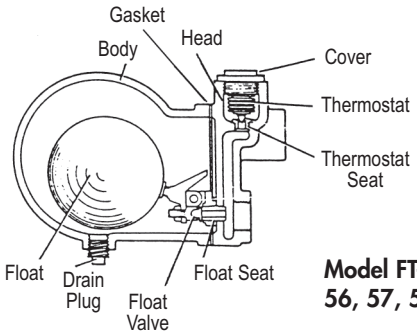

Model FT-74, 75, 78, 56, 57, 58, 86, 87, 88

INVERTED BUCKET (HORIZONTAL) OPERATING FUNDAMENTALS

TYPICAL DESIGN AND MATERIALS

This schematic presents materials commonly used in various components of Sterlco® Inverted Bucket Steam Traps. Information regarding materials in specific models is available upon request. All Inverted Bucket Steam Traps are constructed of cast iron with screwed connections.

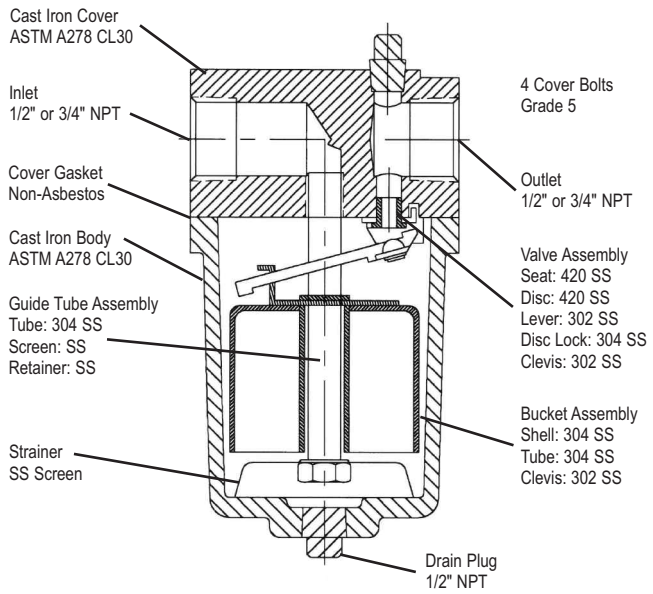

Model 819

APPLICATIONS

Sterlco® Inverted Bucket Steam Traps are commonly used wherever complete and rapid removal of condensate is essential. Specific uses include installation on steam systems serving autoclaves, steam mains, desuperheaters, stills, water heaters, sterilizers, cylinder or drum dryers and many other steam systems. Models for air systems are available also. Advanced steam trap designs can inlude optional items such as the integral strainer and air eliminator.

DESIGN FEATURES

Duo-Step Leverage: By using a relatively short trap lever with two fulcrum points, more power is developed to open the trap valve. This allows greater trap capacity without increasing trap size.

STERLCO RENEWABLE SEATS

All traps offer the economy of renewable seats, either screwed or pressed, greatly extending trap service life.

Guide Tube: Many models employ bucket guide tubes. Guide tubes assure precise parts alignment for improved operation. Buckets do not hit trap bodies, reducing wear. Condensate is directed to the bottom of the trap reducing water hammer damage.

OPTIONS

Air Eliminator: Effective trap operation is assured by using air eliminators to expel non-condensing gases that can build up inside the bucket.

Integral Strainer: Condensate is directed to the bottom of the trap and any dirt or scale in suspension will be trapped beneath the strainer screen. Periodic cleaning is accomplished by simply removing the drain plug and allowing sediment to drain from the trap.

Series 60: Pressures up to 250 psi

Series 19: Pressures up to 200 psi

Series 21-25: Pressures up to 250 psi

INVERTED BUCKET TRAP CAPACITIES

TYPICAL DESIGN AND MATERIALS

Model Number	Model Sizes	Weight (lbs)	Continuous Discharge Capacities in Lbs. Per Hour at Indicated Pressure Orifice Diameters are Shown at the Maximum Operating Pressure for Each Trap									
			5	15	20	30	50	80	125	150	200	250
60DR	1/2 - 3/4	5.0	1/4 850	1/4 1060	13/64 1100	13/64 1400	5/32 1100	5/32 1330	1/8 1050	7/64 900	7/64 980	3/32 825
119	1/2 - 3/4	5.0	1/4 850	1/4 1060	1/4 1200	5/32 710	5/32 900	1/8 860	3/32 680	3/32 710	5/64 580	-
121	1/2 - 3/4	10.0	5/16 1520	5/16 2200	5/16 2600	7/32 2570	7/32 2490	3/16 2170	5/32 2060	5/32 2220	9/64 1920	1/8 1480
122	3/4 - 1	13.8	3/8 2720	3/8 4000	3/8 4500	9/32 3000	9/32 3700	1/4 4300	7/32 4090	7/32 4400	13/64 3700	11/64 3600
123	1 - 1 1/4	30.5	5/8 5100	5/8 8300	5/8 9800	13/32 6500	13/32 8100	13/32 10400	3/8 10500	5/16 8500	1/4 6800	1/4 7800
124	1 1/4 - 1 1/2	43.0	3/4 7200	3/4 11000	3/4 13000	9/16 10700	9/16 13500	7/16 12700	13/32 11500	13/32 12500	3/8 14000	5/16 11500
125	1 1/2 - 2	75.0	1 1/16 21000	1 1/16 34300	1 1/16 40300	3/4 29300	3/4 37400	5/8 23000	1/2 19100	1/2 20500	13/32 16800	3/8 13750

HORIZONTAL CAST IRON WITH STRAINER

62DRS	1/2 - 3/4	5.0	1/4 850	1/4 1060	13/64 1100	13/64 1400	5/32 1100	5/32 1330	1/8 1050	7/64 900	7/64 980	3/32 825
819	1/2 - 3/4	6.0	1/4 850	1/4 1060	1/4 1200	5/32 710	5/32 900	1/8 860	3/32 680	3/32 710	5/64 580	-
821	1/2 - 3/4	10.	5/16 1520	5/16 2200	5/16 2600	7/32 2570	7/32 2490	3/16 2170	5/32 2060	5/32 2220	9/64 1920	1/8 1480
822	3/4 - 1	13.8	3/8 2720	3/8 4000	3/8 4500	9/32 3000	9/32 3700	1/4 4300	7/32 4090	7/32 4400	13/64 3700	11/64 3600
823	1 - 1 1/4	30.5	5/8 5100	5/8 8300	5/8 9800	13/32 6500	13/32 8100	13/32 10400	3/8 10500	5/16 8500	1/4 6800	1/4 7800

HORIZONTAL CAST IRON

Model Number	Model Sizes	Max. PSI and Temp. (ºF)	Capacity Range	Standard Performance Features					Option
				S/S Valve and Seat	All S/S Internals	Renewable Screwed	Seat Pressed	Integral Strainer	Air Elim.
60DR	1/2 - 3/4	250/450	825/1400	•	•	•	-	-	•
119	1/2 - 3/4	200/450	390/1650	•	•	-	•	-	•
121	1/2 - 3/4	250/450	600/2680	•	•	•	-	-	•
122	3/4 - 1	250/450	1220/4800	•	•	•	-	-	•
123	1 - 1 1/4	250/450	2250/10500	•	-	•	-	-	•
124	1 1/4 - 1 1/2	250/450	3240/14000	•	-	•	-	-	•
125	1 1/2 - 2	250/450	9200/40300	•	-	•	-	-	•

HORIZONTAL CAST IRON WITH STRAINER

62DRS	1/2 - 3/4	250/450	825/1400	•	•	•	-	•	•
819	1/2 - 3/4	200/450	390/1650	•	•	-	•	•	•
821	1/2 - 3/4	250/450	600/2680	•	•	•	-	•	•
822	3/4 - 1	250/450	1220/4800	•	•	•	-	•	•
823	1 - 1 1/4	250/450	2250/10500	•	-	•	-	•	•

INVERTED BUCKET TRAP DIMENSIONS AND FEATURES

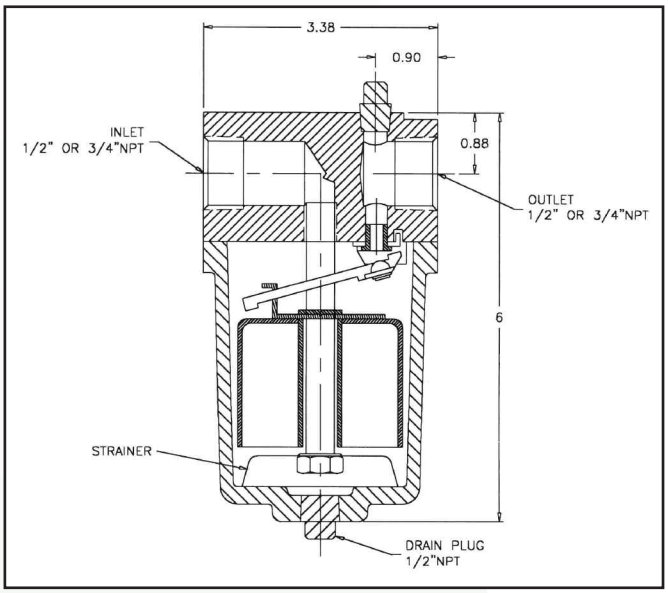

MODEL 119 - WITHOUT STRAINER
MODEL 819 - WITH STRAINER

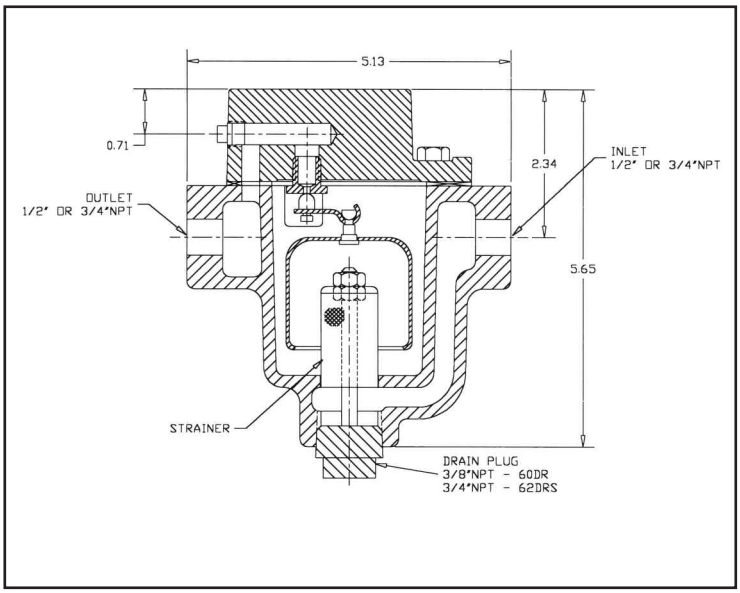

MODEL 60DR - WITHOUT STRAINER
MODEL 60DRS - WITH STRAINER

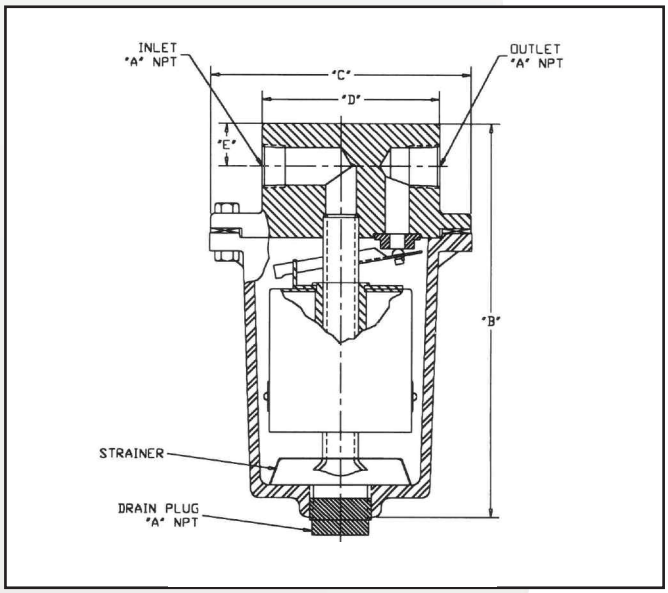

100 SERIES - WITHOUT STRAINER
800 SERIES - WITH STRAINER

Model	A	B	C	D	E
121 and 821	1/2 or 3/4	7.25	5.00	3.00	0.97
122 and 822	3/4 or 1	8.75	5.50	3.75	0.91
123 and 823	1 or 1 1/4	12.50	7.38	4.75	2.25
124	1 1/4 or 1 1/2	14.95	8.25	5.50	2.38
125	1 1/2 or 2	17.40	9.75	7.00	3.13

INVERTED BUCKET SIZING INFORMATION

GUIDES TO SELECTING THE PROPER STEAM TRAP SIZE

1. Determine the amount of steam condensate (per hour) to be handled by the trap. This information can usually be supplied by the equipment manufacturer, or the condensate amount can be determined by weighing it. Step-by-step formulas for calculating hourly condensate amounts are available upon request.

2. Determine the differential pressure. This is the supply pressure or maximum steam operating pressure, less any back pressure in the return main. If discharged into a vacuum, the amount of vacuum would be added to the operating pressure. (Note the various Differential Pressures listed in the DIMENSIONS & DISCHARGE CAPACITIES TABLE)

3. Determine the trap capacity factor. A steam trap's listed "continuous discharge capacity" indicates the pounds per hour of condensate that can be discharged by a trap when the trap valve is wide open. For all the bucket trap models described in this catalog section, continuous capacities are presented in the DISCHARGE CAPACITIES TABLE provided.

However, to select the correct size trap for a specific application, it is important to know that steam traps do not operate continuously in the wide open valve position. To compensate for this, a variable "factoring number" must be applied.

For example, if you have determined that your equipment will discharge condensate at 900 pounds per hour, this 900 figure must be multiplied by a factor of 2, 3, 4, 5 or 6, depending on the type of equipment being trapped. The Table of Factors presented here provides the proper factoring information.

EXAMPLE

Condensate to be Handled: 900 lbs. per hour

Type of Equipment: Steam Mains

Equipment Factor: Multiply by 4

Factored Condensate: 3600 lbs. per hour

TABLE OF FACTORS

Autoclaves	3-4
Blast Coils	3-4
Dry Cans	2-3
Dryers	3-4
Dry Kilns	3-4
Fan System Heating Service	3-4
Greenhouse Coils	3-4
Hospital Equipment	2-3
Water Heaters	4-6
Kitchen Equipment	2-3
Paper Machines	3-4
Piple Coils (still air)	3-4
Platen Presses	2-3
Purifiers	3-4
Separators	3-4
Steam Kettles	4-5
Steam Mains	3-4
Submerged Surfaces	5-6
Tracer Lines	2-3
Unit Heaters	3-4

Minimum Operating Pressure (lbs.)	Maximum Operating Pressure																						Minimum Operating Pressure (lbs.)
	5	10	15	20	30	40	50	60	70	80	90	100	125	150	200	225	250	300	400	500	600	700	
1/10	.14	.10	.09	.08	.07	.06	.05	.05	.05	.04	.04	.04	.04	.04	.03	.03	.03	.03					1/10
1/4	.22	.16	.14	.12	.10	.09	.08	.07	.07	.07	.06	.06	.06	.05	.05	.04	.04	.04					1/4
1/2	.32	.22	.19	.17	.14	.12	.11	.10	.09	.09	.08	.08	.07	.07	.06	.06	.05	.05					1/2
1	.45	.32	.26	.23	.19	.17	.15	.14	.13	.12	.11	.11	.10	.10	.09	.08	.08	.08					1
2	.63	.45	.36	.33	.27	.23	.20	.19	.18	.17	.16	.16	.15	.13	.12	.11	.11	.11					2
3	.78	.55	.45	.40	.33	.29	.27	.24	.23	.21	.20	.19	.18	.16	.15	.14	.13	.13					3
4	.89	.64	.52	.46	.38	.33	.30	.27	.26	.24	.23	.23	.20	.19	.17	.16	.15	.15					4
5	1.00	.71	.58	.52	.43	.37	.34	.31	.29	.27	.26	.25	.23	.21	.19	.18	.18	.16	.14	.12	.11	.10	5
10		1.00	.82	.72	.61	.52	.48	.44	.41	.39	.37	.36	.32	.30	.27	.26	.25	.23	.20	.18	.16	.15	10
15			1.00	.85	.73	.62	.59	.56	.51	.48	.45	.43	.39	.36	.32	.30	.29	.27	.24	.21	.19	.18	15
20				1.00	.83	.73	.66	.61	.58	.55	.51	.49	.44	.42	.36	.34	.33	.31	.27	.24	.22	.20	20
25					.91	.80	.73	.69	.65	.61	.55	.53	.47	.46	.40	.38	.37	.34	.30	.27	.24	.22	25
30					1.00	.88	.79	.75	.70	.66	.60	.59	.54	.50	.45	.42	.41	.38	.33	.30	.27	.25	30
40						1.00	.90	.84	.80	.76	.69	.67	.61	.57	.50	.48	.46	.43	.37	.34	.31	.28	40
50							1.00	.93	.89	.84	.78	.75	.68	.63	.56	.53	.51	.48	.42	.37	.34	.32	50
60								1.00	.93	.88	.83	.80	.73	.68	.60	.57	.55	.52	.45	.41	.37	.34	60
70									1.00	.94	.89	.85	.78	.73	.64	.61	.59	.55	.48	.43	.39	.36	70
80										1.00	.95	.91	.82	.75	.68	.66	.63	.59	.51	.46	.42	.39	80
90											1.00	.95	.87	.81	.71	.68	.66	.61	.53	.48	.43	.40	90
100												1.00	.91	.85	.75	.73	.70	.64	.56	.50	.45	.42	100
125													1.00	.93	.83	.80	.75	.71	.62	.55	.50	.47	125
150														1.00	.89	.86	.80	.75	.65	.59	.53	.50	150
175															.94	.92	.87	.81	.70	.63	.58	.53	175
200															1.00	.96	.90	.85	.74	.66	.60	.56	200
225																1.00	.97	.90	.78	.70	.64	.59	225
250																	1.00	.93	.81	.73	.66	.61	250
275																		.96	.84	.75	.68	.63	275
300																		1.00	.87	.78	.71	.66	300
400																			1.00	.90	.82	.76	400
500																				1.00	.92	.85	500
600																					1.00	.93	600
700																						1.00	700

DETERMINING TRAP CAPACITY AT REDUCED PRESSURES

Problem What is the rating of a Model 122 suitable for 200 lbs. operating pressure - when operating at 70 lbs. pressure?

Solution Rating of a Model 122 at 200 lbs. operating pressure is 3700 lbs. per hour. Referring to the Reduced Capacity Table provided here, locate the 200 lbs. column and move down to the figure opposite the 70 lbs. line - where you locate the .64 factor. Using this .64 factor (3700 x .64), the Model 122 rating at the reduced pressure of 70 lbs. is 2368.

INVERTED BUCKET (VERTICAL) OPERATING FUNDAMENTALS

TYPICAL DESIGN AND MATERIALS

This schematic presents materials commonly used in various components of Sterlco® Inverted Bucket Steam Traps. Information regarding materials in specific models is available upon request. All Inverted Bucket Steam Traps are constructed of cast iron with screwed connections.

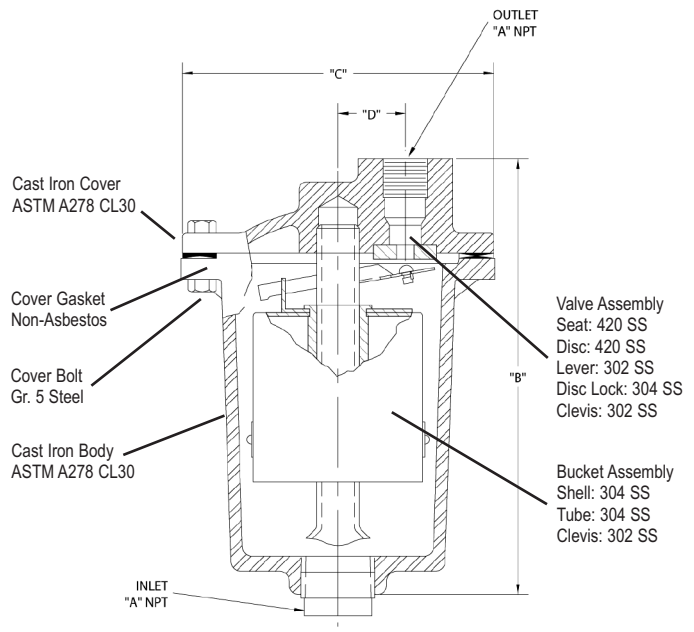

Model 621 and 624

APPLICATIONS

Sterlco® Inverted Bucket Steam Traps are commonly used wherever complete and rapid removal of condensate is essential. Specific uses include installation on steam systems serving autoclaves, steam mains, desuperheaters, stills, water heaters, sterilizers, cylinder or drum dryers and many other steam systems. Models for air systems are available also. Advanced steam trap designs can include optional items such as the integral strainer and air eliminator.

DESIGN FEATURES

Duo-Step Leverage: By using a relatively short trap lever with two fulcrum points, more power is developed to open the trap valve. This allows greater trap capacity without increasing trap size.

STERLCO RENEWABLE SEATS

All traps offer the economy of renewable seats, either screwed or pressed, greatly extending trap service life.

Guide Tube: Many models employ bucket guide tubes. Guide tubes assure precise parts alignment for improved operation. Buckets do not hit trap bodies, reducing wear. Condensate is directed to the bottom of the trap reducing water hammer damage.

OPTIONS

Air Eliminator: Effective trap operation is assured by using air eliminators to expel non-condensing gases that can build up inside the bucket.

Integral Strainer: Condensate is directed to the bottom of the trap and any dirt or scale in suspension will be trapped beneath the strainer screen. Periodic cleaning is accomplished by simply removing the drain plug and allowing sediment to drain from the trap.

Model 6DR

Model 621

Model 624

INVERTED BUCKET (VERTICAL) DIMENSIONS AND CAPACITIES

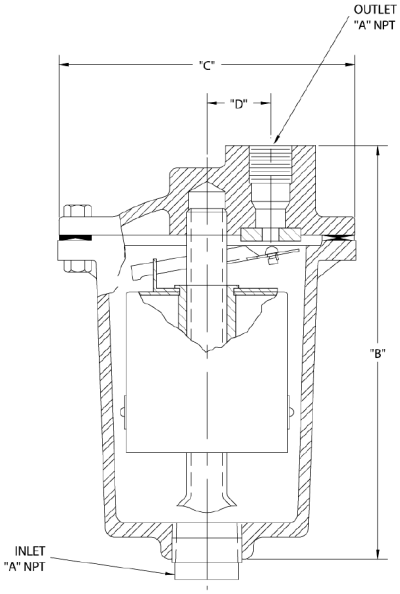

Model 621 and 624

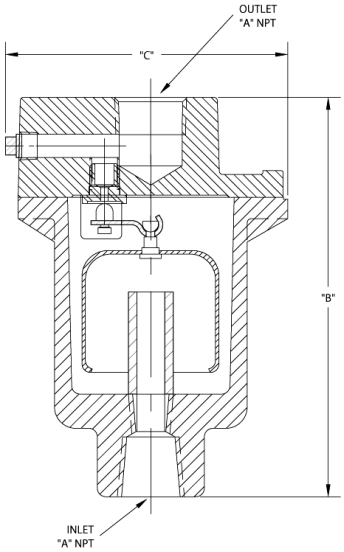

Model 6DR

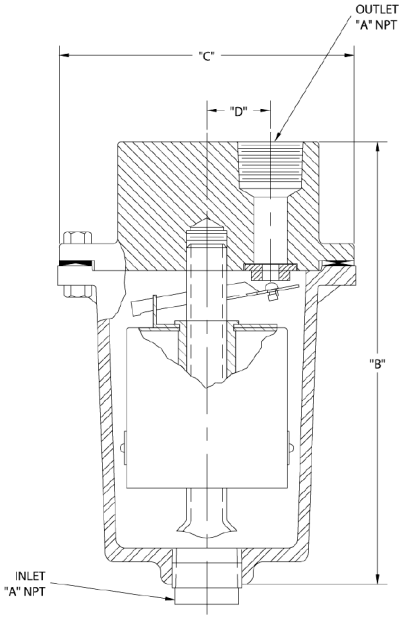

Model 622, 623, 625

DIMENSIONS AND DISCHARGE CAPACITIES

Continuous Discharge Capacities in Lbs. Per Hr. at Indicated Pressure Orifice Diameters are Shown at the Maximum Operating Pressure for Each Trap															
Model	A	B	C	D	Weight	5	15	20	30	50	80	125	150	200	250
6DR	1/2 or 3/4	5.375	3.875	N/A	6 lbs.	1/4 850	1/4 1060	13/64 1100	13/64 1400	5/32 1100	5/32 1330	1/8 1050	7/64 900	7/64 980	3/32 825
621	1/2 or 3/4	6.75	5.00	1.06	11 lbs.	5/16 1520	5/16 2200	5/16 2600	7/32 2570	7/32 2490	3/16 2170	5/32 2060	5/32 2220	9/64 1920	1/8 1480
622	3/4 or 1	8.75	5.50	1.19	15 lbs.	3/8 2720	3/8 4000	3/8 4500	9/32 3000	9/32 3700	1/4 4300	7/32 4090	7/32 4400	13/64 3700	11/64 3600
623	1 or 1 1/4	12.50	7.38	1.25	32 lbs.	5/8 5100	5/8 8300	5/8 9800	13/32 6500	13/32 8100	13/32 10,400	3/8 10,500	5/16 8500	1/4 6800	1/4 7800
624	1 1/4 or 1 1/2	12.13	8.19	1.25	45 lbs.	3/4 7200	3/4 11,000	3/4 13,000	9/16 10,700	9/16 13,500	7/16 12,700	13/32 11,500	13/32 12,500	3/8 14,000	5/16 11,500
625	1 1/2 or 2	17.40	9.75	2.35	77 lbs.	1 1/16 21,000	1 1/16 34,300	1 1/16 40,300	3/4 29,300	3/4 37,400	5/8 23,000	1/2 19,100	1/2 20,500	13/32 16,800	3/8 13,750

STEAM TRAPS

APPLICATION	RECOMMENDED	ALTERNATE
Absorption Chillers	Float & Therm.	Bucket
Air Handling Coils (High and Low Pressure)	Float & Therm.	Bucket
Air Heaters, Process	Float & Therm.	Bucket
Air Heating Coils	Float & Therm.	-
Boiling Pans	Float & Therm.	Thermostatic
Chamber Dryers, Process	Float & Therm.	Bucket
Coffee Urns	Float & Therm.	Bucket
Convectors, Fin Tube	Thermostatic	-
Cookers	Thermostatic	-
Cylinder Dryers	Bucket	-
Drum Dryers	Bucket	-
Dry Cans	Bucket	-
Evaporators	Float & Therm.	Bucket
Food Processing Equip.		
Evaporators	Float & Therm.	Bucket
Kettles, Jacketed	Float & Therm.	Bucket
Kettles, Open	Float & Therm.	Bucket
C.I.P. Systems	Float & Therm.	Bucket
Fuel Oil Preheaters	Bucket	-
Greenhouse Coils	Thermostatic	-
Headers - Steam	Bucket	-
Heater, Water	Float & Therm.	Bucket
Heating Coils	Thermostatic	-
Heat Exchangers	Float & Therm.	Bucket
Humidifiers	Float & Therm.	Bucket
Laundry Equipment		
Tumblers	Float & Therm.	Bucket
Solvent Recoverers	Float & Therm.	Bucket

APPLICATION	RECOMMENDED	ALTERNATE
Mains:		
Low Pressure	Float & Therm.	Bucket
High Pressure	Bucket	-
Overhead	Bucket	-
Oil Preheaters	Thermostatic	-
Paper Dryers	Bucket	Thermostatic
Pipe Coils	Thermostatic	-
Platen Press	Bucket	-
Plating Tanks	Thermostatic	-
Preheating Tanks	Bucket	Thermostatic
Re-Boilers	Float & Therm.	Bucket
Risers	Bucket	-
Rotary Dryers	Bucket	-
Separators, Steam	Float & Therm.	Bucket
Slashers	Bucket	-
Sterilizers	Bucket	Thermostatic
Shell & Tube Exchangers	Float & Therm.	Bucket
Storage Tank Coils	Float & Therm.	Bucket
Storage Water heaters	Float & Therm.	Bucket
Submerged Coils	Thermostatic	-
Tank Car Coils	Thermostatic	-
Tire Molds	Bucket	-
Tracer Lines	Thermostatic	-
Tumblers	Bucket	-
Unit Heaters, Overhead	Float & Therm.	Bucket
Vulcanizers	Bucket	-

ENGINEERING DATA

WARM-UP LOAD IN POUNDS OF STEAM PER 100 FEET OF STEAM MAIN* AMBIENT TEMPERATURE 70ºF

Steam Pressure	Main Size														0ºF Correction Factor**
	2"	2 1/2"	3"	4"	5"	6"	8"	10"	12"	14"	16"	18"	20"	24"	
0	6.3	9.7	12.8	18.2	24.6	31.9	48	68	90	107	140	176	207	208	1.50
5	6.9	11.0	14.4	20.4	27.7	35.9	48	77	101	120	157	198	233	324	1.44
10	7.5	11.8	15.5	22.0	29.9	38.8	58	83	109	130	169	213	251	350	1.41
20	8.4	13.4	17.5	24.9	33.8	43.9	68	93	124	146	191	241	284	396	1.37
40	9.9	15.8	20.6	29.3	39.7	51.6	78	110	145	172	225	284	334	465	1.32
60	11.0	17.5	22.9	32.5	44.2	57.3	86	122	162	192	250	318	372	518	1.29
80	12.0	19.0	24.9	35.3	47.9	62.1	93	132	175	208	271	342	403	561	1.27
100	12.8	20.3	26.6	37.8	51.2	66.5	100	142	188	222	290	368	431	600	1.26
125	13.7	21.7	28.4	40.4	54.8	71.1	107	152	200	238	310	391	461	642	1.25
150	14.5	23.0	30.0	42.8	58.0	75.2	113	160	212	251	328	414	487	679	1.24
175	15.3	24.2	31.7	45.1	61.2	79.4	119	169	224	265	347	437	514	716	1.23
200	16.0	25.3	33.1	47.1	63.8	82.8	125	177	234	277	362	456	537	748	1.22
250	17.2	27.3	35.8	50.8	68.9	89.4	134	191	252	299	290	492	579	807	1.21
300	25.0	38.3	51.3	74.8	104.0	142.7	217	322	443	531	682	854	1045	1182	1.20
400	27.8	42.6	57.1	83.2	115.7	158.7	241	358	493	590	759	971	1163	1650	1.18
500	30.2	46.3	62.1	90.5	125.7	172.6	262	389	535	642	825	1033	1263	1793	1.17
600	32.7	50.1	67.1	97.9	136.0	186.6	284	421	579	694	893	1118	1367	1939	1.16

*Loads based on Schedule 40 pipe for pressures up to and including 250 psig and on Schedule 80- pipe for pressures above 250 psig.
**For outdoor temperature of 0ºF multiply load value in table for each main size by correction factor corresponding to steam pressure.

CONDENSATION LOAD IN POUNDS PER HOUR PER 100 FEET OF INSULATED STEAM MAIN*AMBIENT TEMPERATURE 70ºF - INSULATION 80% EFFICIENT

Steam Pressure	Main Size														0ºF Correction Factor**
	2"	2 1/2"	3"	4"	5"	6"	8"	10"	12"	14"	16"	18"	20"	24"	
10	6	7	9	11	13	16	20	24	29	32	36	39	44	53	1.58
30	8	9	11	14	17	20	26	32	38	42	48	51	57	68	1.50
60	10	12	14	18	24	27	33	41	49	54	62	67	74	89	1.45
100	12	15	18	22	28	33	41	51	61	67	77	83	93	111	1.41
125	13	16	21	24	30	36	45	56	66	73	84	90	101	121	1.39
175	16	19	23	26	33	38	53	66	78	86	98	107	119	142	1.38
250	18	22	27	34	42	50	62	77	92	101	116	126	140	168	1.36
300	20	25	30	37	46	54	68	85	101	111	126	138	154	184	1.35
400	23	28	34	43	53	63	80	99	118	130	148	162	180	216	1.35
500	27	33	39	49	61	73	91	114	135	148	170	185	206	246	1.32
600	30	37	44	55	68	82	103	128	152	167	191	208	232	277	1.31

*Chart loads represent losses due to radiation and convection for saturated steam.
**For outdoor temperature of 0ºF multiply load value in table for each main size by correction factor corresponding to steam pressure.

STEAM LOSSES (LBS. PER DAY) THROUGH VARIOUS SIZED ORIFICES AT INDICATED PRESSURES

Orifice Size	Pressure (PSI)								
	5	10	30	50	100	125	150	200	250
1/16"	100	155	215	260	346	380	415	475	520
3/32"	230	350	485	585	780	860	935	1070	1170
1/8"	415	620	865	1040	1385	1520	1660	1900	2080
3/16"	930	1400	1950	2330	3110	3420	3730	4260	4660
1/4"	1660	2490	3470	4150	5540	6100	6650	7600	8300
5/16"	2590	3890	5410	6480	8650	9500	10400	11800	13000
3/8"	3740	5600	7800	9350	12470	13700	14900	17100	18700
7/16"	5090	7620	10600	12700	16950	18600	20300	23200	25400
1/2"	6640	9950	13800	16500	22100	24300	26500	30300	33150

PROPERTIES OF SATURATED STEAM

Gauge Pressure PSIG	Temp.ºF	Heat in BTU/Lb.			Specific Volume Cu. Ft. per Lb.	Gauge Pressure PSIG	Temp. ºF	Heat in BTU/Lb.			Specific Volume Cu. Ft. per Lb.
		Sensible	Latent	Total				Sensible	Latent	Total	
25	134	102	1017	1119	142	150	366	339	857	1196	2.74
20	162	129	1001	1130	73.9	155	368	341	855	1196	2.68
15	179	147	990	1137	51.3	160	371	344	853	1197	2.60
10	192	160	982	1142	39.4	165	373	346	851	1197	2.54
5	203	171	976	1147	31.8	170	375	34 8	849	1197	2.47
0	212	180	970	1150	26.8	175	377	351	847	1198	2.41
1	215	183	968	1151	25.2	180	380	353	845	1198	2.34
2	219	187	966	1153	23.5	185	382	355	843	1198	2.29
3	222	190	964	1154	22.3	190	384	358	841	1199	2.24
4	224	192	962	1154	21.4	195	386	360	839	1199	2.19
5	227	195	960	1155	20.1	200	388	362	837	1199	2.14
6	230	198	959	1157	19.4	205	390	364	836	1200	2.09
7	232	200	957	1157	18.7	210	392	366	834	1200	2.05
8	233	201	956	1157	18.4	215	394	368	832	1200	2.00
9	237	205	954	1159	17.1	220	396	370	830	1200	1.96
10	239	207	953	1160	16.5	225	397	372	828	1200	1.92
12	244	212	949	1161	15.3	230	399	374	827	1201	1.89
14	248	216	947	1163	14.3	235	401	376	825	1201	1.85
16	252	220	944	1164	13.4	240	403	378	823	1201	1.81
18	256	224	941	1165	12.6	245	404	380	822	1202	1.78
20	259	227	939	1166	11.9	250	406	382	820	1202	1.75
22	262	230	937	1167	11.3	255	408	383	819	1202	1.72
24	265	233	934	1167	10.8	260	409	385	817	1202	1.69
26	268	236	933	1169	10.3	265	411	387	815	1202	1.66
28	271	239	930	1169	9.85	270	413	389	814	1203	1.63
30	274	243	929	1172	9.46	275	414	391	812	1203	1.60
32	277	246	927	1173	9.10	280	416	392	811	1203	1.57
34	279	248	925	1173	8.75	285	417	394	809	1203	1.55
36	282	251	923	1174	8.42	290	418	395	808	1203	1.53
38	284	253	922	1175	8.08	295	420	397	806	1203	1.49
40	286	256	920	1176	7.82	300	421	398	805	1203	1.47
42	289	258	918	1176	7.57	305	423	400	803	1203	1.45
44	291	260	917	1177	7.31	310	425	402	802	1204	1.43
46	293	262	915	1177	7.14	315	426	404	800	1204	1.41
48	295	264	914	1178	6.94	320	427	405	799	1204	1.38
50	298	267	912	1179	6.68	325	429	407	797	1204	1.36
55	300	271	909	1180	6.27	330	430	408	796	1204	1.34
60	307	277	906	1183	5.84	335	432	410	794	1204	1.33
65	312	282	901	1183	5.49	340	433	411	793	1204	1.31
70	316	286	898	1184	5.18	345	434	413	791	1204	1.29
75	320	290	895	1185	4.91	350	435	414	790	1204	1.28
80	324	294	891	1185	4.67	355	437	416	789	1205	1.26
85	328	298	889	1187	4.44	360	438	417	788	1205	1.24
90	331	302	886	1188	4.24	365	440	419	786	1205	1.22
95	335	305	883	1188	4.05	370	441	420	785	1205	1.20
100	338	309	880	1189	3.89	375	442	421	784	1205	1.19
105	341	312	878	1190	3.74	380	443	422	783	1205	1.18
110	344	316	875	1191	3.59	385	445	424	781	1205	1.16
115	347	319	873	1192	3.46	390	446	425	780	1205	1.14
120	350	322	871	1193	3.34	395	447	427	778	1205	1.13
125	353	325	868	1193	3.23	400	448	428	777	1205	1.12
130	356	328	866	1194	3.12	450	460	439	766	1205	1.00
140	361	333	861	1194	2.92	500	470	453	751	1204	.89
145	363	336	859	1195	2.84	550	479	464	740	1204	.82
						600	489	475	728	1203	.74

NOTES:

In 1916, the company, then known as the Sterling Engineering Company, began designing and manufacturing valves, traps, strainers and condensate pumps for steam and hot water systems.

Today, with more than 90 years of application experience, a diverse engineering staff, state-of-the art CAD design and thousands of custom applications, we are uniquely suited to meet your individual requirements and specifications.

Sterling
STEAM CONTROL PRODUCTS

Sterling New Berlin
2900 S 160th Street
New Berlin, WI 53151 USA
Tel: 262-641-3808/888-777-4085
Fax: 262-641-8625
www.steamcontrolproducts.com

STERLCO®

STERLCO® PRODUCTS INCLUDE:
• HAND RADIATOR VALVES • THERMOSTATIC TRAPS • FLOAT AND THERMOSTATIC TRAPS
• INVERTED BUCKET TRAPS • CAST IRON STRAINERS • BRASS STRAINERS • BOILER FEED UNITS
• TANK AND PROCESS TEMPERATURE CONTROL VALVES • CONDENSATE PUMPS